THIS COPY IS PROVIDED ON A RESTRICTED BASIS AND IS NOT TO BE USED IN ANY WAY DETRIMENTAL TO THE INTERESTS OF PANDUIT CORP.

G

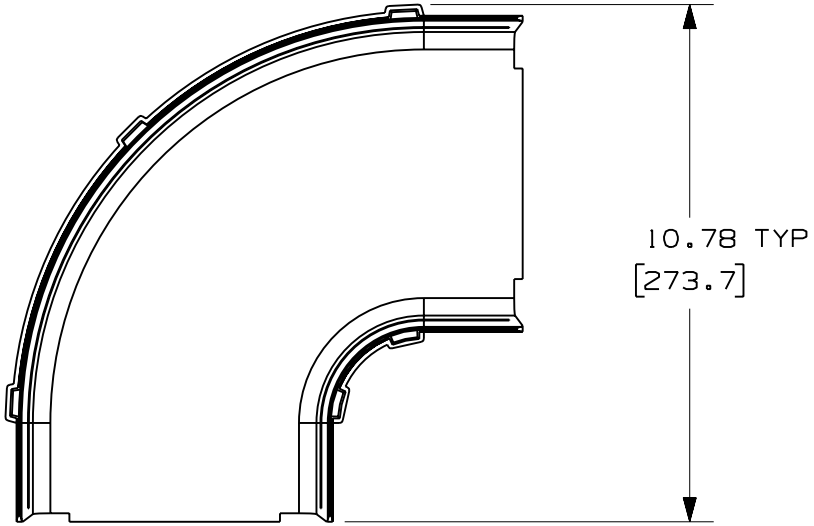

PANDUIT PART NUMBER	WEIGHT
FRRA6X4	0.84 LB/EACH (382g/EACH)

J NOTES:

1. SEE CURRENT CATALOG FOR ADDITIONAL PART SUFFIXES TO INDICATE COLOR AND/OR PACKAGE QUANTITY.
2. THE FIBERRUNNER 6x4 HORIZONTAL RIGHT ANGLE FITTING IS DESIGNED WITH A MINIMUM 2" (50.8) BEND RADIUS TO PROTECT FIBER OPTIC CABLES.
3. DIMENSIONS IN PARENTHESES ARE IN METRIC.

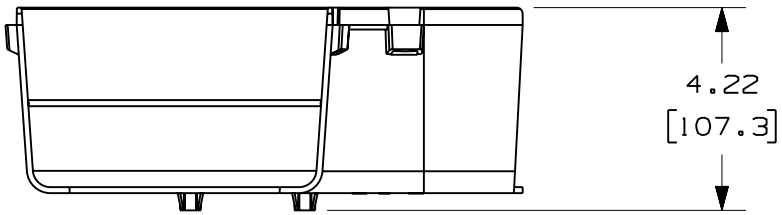

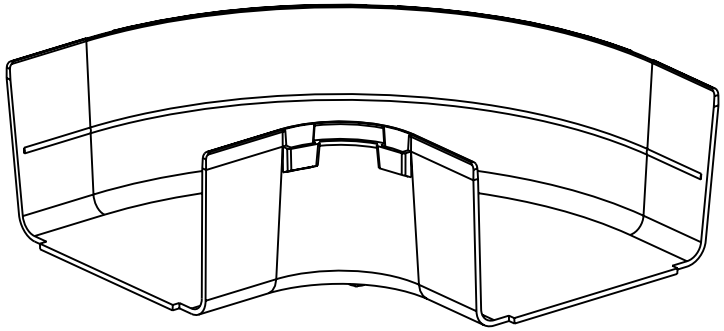

ENG. REF.: D37185EN_DC_FRRA6X4_02.prt

CAD FILENAME/LAYERS I FRRA6X4.pdf

PANDUIT CORP TINLEY PARK, ILLINOIS

FIBERRUNNER 6x4 HORIZONTAL RIGHT ANGLE FITTING (FRRA6X4)

H CUSTOMER DRAWING

UNLESS OTHERWISE SPECIFIED, DIMENSIONAL TOLERANCES ARE:
(.X) ± (.XXX) ±
(.XX) ±.03 (.8) ANGLES ±

UNLESS OTHERWISE SPECIFIED, ALL DIMENSIONS ARE GIVEN IN INCHES, THIRD ANGLE PROJECTION.

REV	DATE	BY	CHK	DESCRIPTION	ECN	CUST R		SUP	GMBH
-	--------	---	---	J. REVISED GENERAL NOTES I. REVISED CAD FILENAME	--------	--	--		
3	7-12-06	DTP	RN	H. REVISED DRAWING TITLE G. REVISED AND REDRAWN	37185-60	RN	RN		

DRAWN BY REWE
DATE 4-28-00
CHK'D HIW
MAT'L: ABS
SCALE NONE
DRAWING NO. 37185-60
DWG A
SIZE